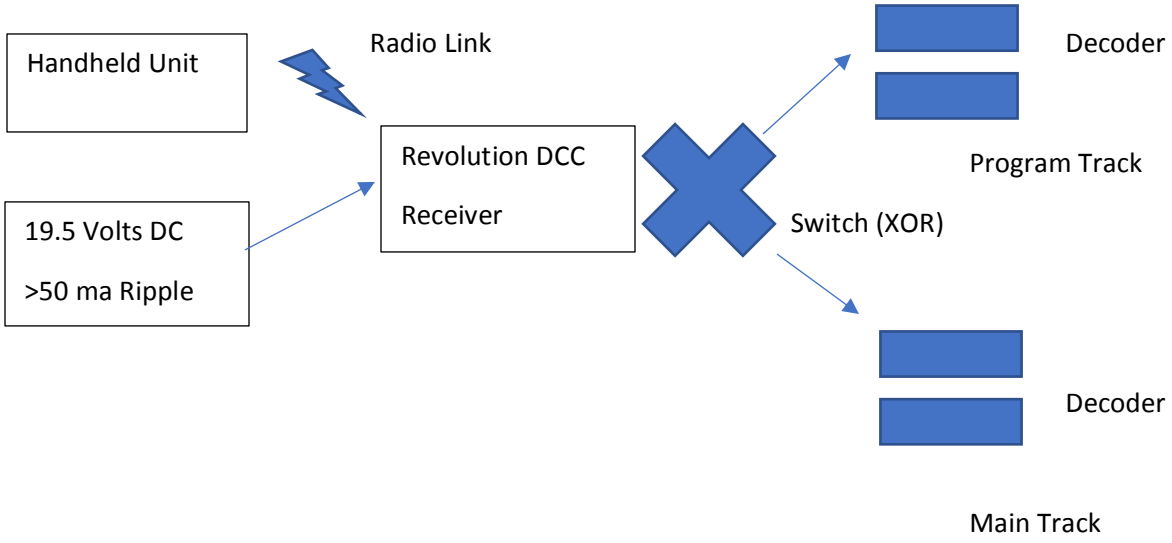
Handheld Unit
Radio Link
Revolution DCC
Receiver
19.5 Volts DC
>50 ma Ripple
Switch (XOR)
Decoder
Program Track
Decoder
Main Track